6,000-pound capacity single-hook and double-hook Safety Cables

Connection instructions and diagrams

ROADMASTER

Quality Towing Systems since 1974

Using your safety cables

Safety cables are an integral part of your towing system. They are a secondary safety device, required by law in many states. These instructions will acquaint you with their proper use.

If you will use these safety cables with a ROADMASTER tow bar and tow bar brackets, these instructions and the accompanying diagrams apply in their entirety. If you will use them with another manufacturer's tow bar and/or tow bar brackets, refer to the manufacturer's instructions, in addition to these, for specific connection instructions.

To ensure your safety and that of your passengers, as well as the safety of others on the road, follow these safe towing practices at all times:

- Always use safety cables when towing. The safety cables must connect the motorhome to the towed vehicle, frame to frame.
- **The weight of the towed vehicle, including all its contents, cannot exceed the weight capacity of the safety cables, or the safety cables will fail.** (Similarly, the weight of the towed vehicle cannot exceed the weight capacity of the tow bar, or any other component of your towing system.)
- Pull the safety cables so that all the slack is at the motorhome. **Be certain there is enough slack in the cables at the motorhome to allow for sharp turns** – if there is not enough slack, the towing system will be severely damaged when the motorhome turns.
- The safety cables must be the correct length…
  - Make certain the cables are not too short – if you use a receiver hitch extension or other equipment that extends the distance between the towed vehicle and the motorhome, the standard cables may be too short. If the cables are too short, the towing system will be severely damaged when the motorhome turns a sharp corner.

    (Twelve-inch safety cable extensions, part number 910648-12, are available from ROADMASTER.)
  - Make certain the cables are not too long – the cables should not hang down to the extent they may catch on obstructions, or drag on the ground. This much slack could cause damage to the towing system, the towed vehicle, or the motorhome.

    If the cables are too long, wrap the excess cable around the tow bar to take up the slack. **The last pass must be to the inside**, to allow the towed vehicle to track in line behind the motorhome (Refer to the accompanying diagrams.). **Be certain there is enough slack in the cables at the motorhome to allow for sharp turns.**
- Always cross the cables under the hitch receiver, as shown in the diagrams on pages two, three and four. In the unlikely event the tow bar separates from the motorhome, crossing the cables will help prevent the tow bar from dragging on the ground, which can cause the tow bar to "pole vault" the towed vehicle.
- Some ROADMASTER tow bar mounting kits with removable arms use two safety cables on each side. If two sets of safety cables are required, both must be used. This is required by law. Refer to the following instructions and diagrams for additional information.

⚠ WARNING

Failure to follow these instructions may cause property damage, personal injury or even death.

Connection instructions

Some ROADMASTER tow bar mounting brackets with removable arms, such as the ones shown on the following pages, use both a long safety cable and a short safety cable on each side. Each **long safety cable** runs from the motorhome to a **quick link** attaching it to one of the **quick-disconnects**. This quick link is also an attachment point for one of the **short safety cables**; another quick link attaches the short safety cable to the mounting bracket.

Unscrew the nuts on each quick link to connect the safety cable loops. Finger-tighten the nuts firmly, until the loop is completely closed, to secure the attachment.

Do not substitute carabiners or other devices for the quick links – the quick links are designed to hold the weight of a towed vehicle; carabiners or other devices are not.

Only ROADMASTER tow bar brackets with removable arms have this three-point attachment system (with the exception of MX brackets). Other brackets, such as ROADMASTER standard and MS brackets, and those of other manufacturers, are bolted directly to the frame of the towed vehicle and do not require short safety cables.

Figure 1 shows the short safety cable attachment for a typical single-hook safety cable system; double-hook attachment is shown in the diagrams for each applicable ROADMASTER tow bar.

⚠ WARNING

The safety cables must be carefully routed so that they cannot become pinched, frayed, scraped or otherwise damaged, and so they will not drag when going over dips or low spots.

Do not use the cables if they show any signs of wear or damage – immediately discontinue towing and replace the cables.

Failure to replace worn or damaged safety cables will result in cable failure, which may cause property damage, personal injury or even death.

Figure 1

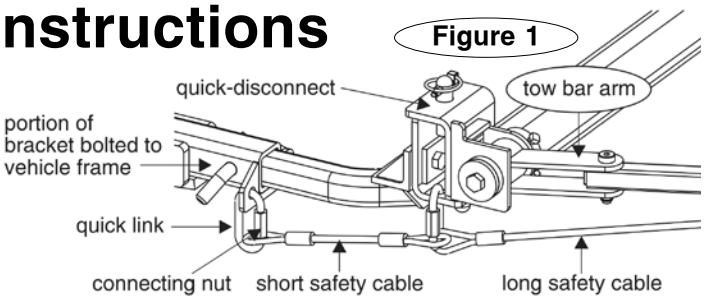

⚠ WARNING

If the quick links are not completely tightened, with the loop closed, the safety cables may detach. In the event of a towing system failure, the towed vehicle will detach, which may cause property damage, personal injury or even death.

⚠ WARNING

If your towing system requires two sets of safety cables, always use both the long and the short safety cables. Connect them as shown in Figure 1, and on the following pages. Otherwise, in the event of a towing system failure, the towed vehicle will detach, which may cause property damage, personal injury or even death.

Tracker™

(For ease of illustration we have shown straight safety cables; Flexo-Coil cables are attached in the same manner.)

Figure 2

For double-hook safety cables…
…attach the second snap hook to a quick-link at the towed vehicle.

Wind the safety cables around the tow bar arms to adjust for excess slack. **The last pass must be to the inside**, to allow the towed vehicle to track in line behind the motorhome.

Cross the safety cables under the coupler (Attach the ends of one cable to the driver's side of the tow bar and the passenger side of the motorhome, and vice versa.). This helps prevent the tow bar from hitting the road and "pole vaulting" if the tow bar separates from the hitch receiver.

Connect the **snap hooks** to the steel loops on the hitch receiver or the frame of the motorhome.

long safety cable

short safety cable

Use **quick links** for easy attachment and removal of the safety cables.

Pass the safety cables through this loop – DO NOT ATTACH THE SAFETY CABLES TO THE LOOP.

Do **not** route the safety cables between the hitch ball and the coupler. Use an optional **cable guide** (part number 669) to help prevent the safety cables and the electrical cord from being crushed or damaged, either between the coupler and the hitch ball, or between the ball mount and the road.

If optional quick-disconnects are used with the Tracker…
…attach the safety cables to the tow bar at the attachment points shown below.

For all tow bars –
If your vehicle is equipped with MX or MS tow bar brackets…

Short safety cables are not used with MX or MS brackets (except, if necessary, to extend the length of the long cables). The connection point at the towed vehicle varies; it may be located on the receiver tube (as shown below) or on another part of the tow bar bracket which is not removable.

long safety cable attached to MX bracket

See page one for detailed connection information.

StowMaster™

(For ease of illustration we have shown straight safety cables; Flexo-Coil cables are attached in the same manner.)

Figure 3

Wind the safety cables around the tow bar arms to adjust for any excess slack. The **last pass must be to the inside**, to allow the towed vehicle to track in line behind the motorhome.

Cross the safety cables under the coupler (Attach the ends of one cable to the driver's side of the tow bar and the passenger side of the motorhome, and vice versa.). This helps prevent the tow bar from hitting the road and "pole vaulting" if the tow bar separates from the hitch receiver.

quick-disconnect

Connect the **snap hooks** to the steel loops on the hitch receiver or the frame of the motorhome.

long safety cable

Use **quick links** for easy attachment and removal of the safety cables.

short safety cable

Pass the safety cables through this loop – DO NOT ATTACH THE SAFETY CABLES TO THE LOOP.

Do **not** route the safety cables between the hitch ball and the coupler. Use an optional **cable guide** (part number 669) to help prevent the safety cables and the electrical cord from being crushed or damaged, either between the coupler and the hitch ball, or between the ball mount and the road.

For double-hook safety cables…
…attach the second snap hook to a quick-link at the towed vehicle, as shown below.

Falcon™ and Falcon 2™

(For ease of illustration we have shown straight safety cables; Flexo-Coil cables are attached in the same manner.)

Figure 4

The **BlackHawk**™ has channel guides identical to those shown below for All Terrain tow bars – only straight, single-hook safety cables can be used with the channel guides.

quick-disconnect

Wind the safety cables around the tow bar arms to adjust for any excess slack. The **last pass must be to the inside**, to allow the towed vehicle to track in line behind the motorhome.

long safety cable

Use **quick links** for easy attachment and removal of the safety cables.

short safety cable

Cross the safety cables under the hitch receiver and stinger (Attach the ends of one cable to the driver's side of the tow bar and the passenger side of the motorhome, and vice versa.). This helps prevent the tow bar from hitting the road and "pole vaulting" if the tow bar separates from the hitch receiver.

Connect the **snap hooks** to the steel loops on the hitch receiver or the frame of the motorhome.

Note: single-hook safety cables for the Falcon, Falcon 2 and BlackHawk tow bars may be reversed, if you prefer to have the snap hooks at the towed vehicle instead of the motorhome. This requires two quick links (not included).

For double-hook safety cables…
…attach the second snap hook to a quick-link at the towed vehicle, as shown below.

All Terrain™ tow bars – BlackHawk, BlackHawk 2™ and Falcon

(Only straight, single-hook safety cables can be used with the All Terrain channel guides.)

For all tow bars – To connect EZ Hook™ safety cables…

At the tow bar, connect each **long safety cable** to a **cable anchor bracket** by inserting the ball through the top of the slot and dragging it down. Attach the **quick link** for the **short safety cable** through the pre-drilled hole in the anchor bracket.
Note: EZ Hook safety cables cannot be used with ROADMASTER MX or MS tow bar brackets.

Figure 5

The **StowMaster All Terrain** has cable guides and release latches like those shown below, with a coupler mounting system identical to the illustration for the StowMaster on page 2.

slot in cable anchor bracket

quick link

short safety cable

long safety cable

Use the built-in **cable guides** to help prevent damage to the safety cables and electrical cord, and for a clean, uncluttered appearance.

quick-disconnect

short safety cable

Use **quick links** for easy attachment and removal of the safety cables.

long safety cable

Connect the **snap hooks** to the steel loops on the hitch receiver or the frame of the motorhome.

Cross the safety cables under the hitch receiver and stinger (Attach the ends of one cable to the driver's side of the tow bar and the passenger side of the motorhome, and vice versa.). This helps prevent the tow bar from hitting the road and "pole vaulting" if the tow bar separates from the hitch receiver.

Note: safety cables for the BlackHawk, BlackHawk2 and Falcon All Terrain tow bars may be reversed, if you prefer to have the snap hooks at the towed vehicle instead of the motorhome. This requires two quick links (not included).

To attach the **EZ Hook™ safety cables**...
At the tow bar, connect each **long safety cable** to a **cable anchor bracket** by inserting the ball through the top of the slot and dragging it down. Attach the **quick link** for the **short safety cable** through the pre-drilled hole in the anchor bracket.
Note: EZ Hook safety cables cannot be used with ROADMASTER MX or MS tow bar brackets.

Sterling™ and Sterling All Terrain™

(Only straight, single-hook safety cables can be used with the tow bar channel guides.)

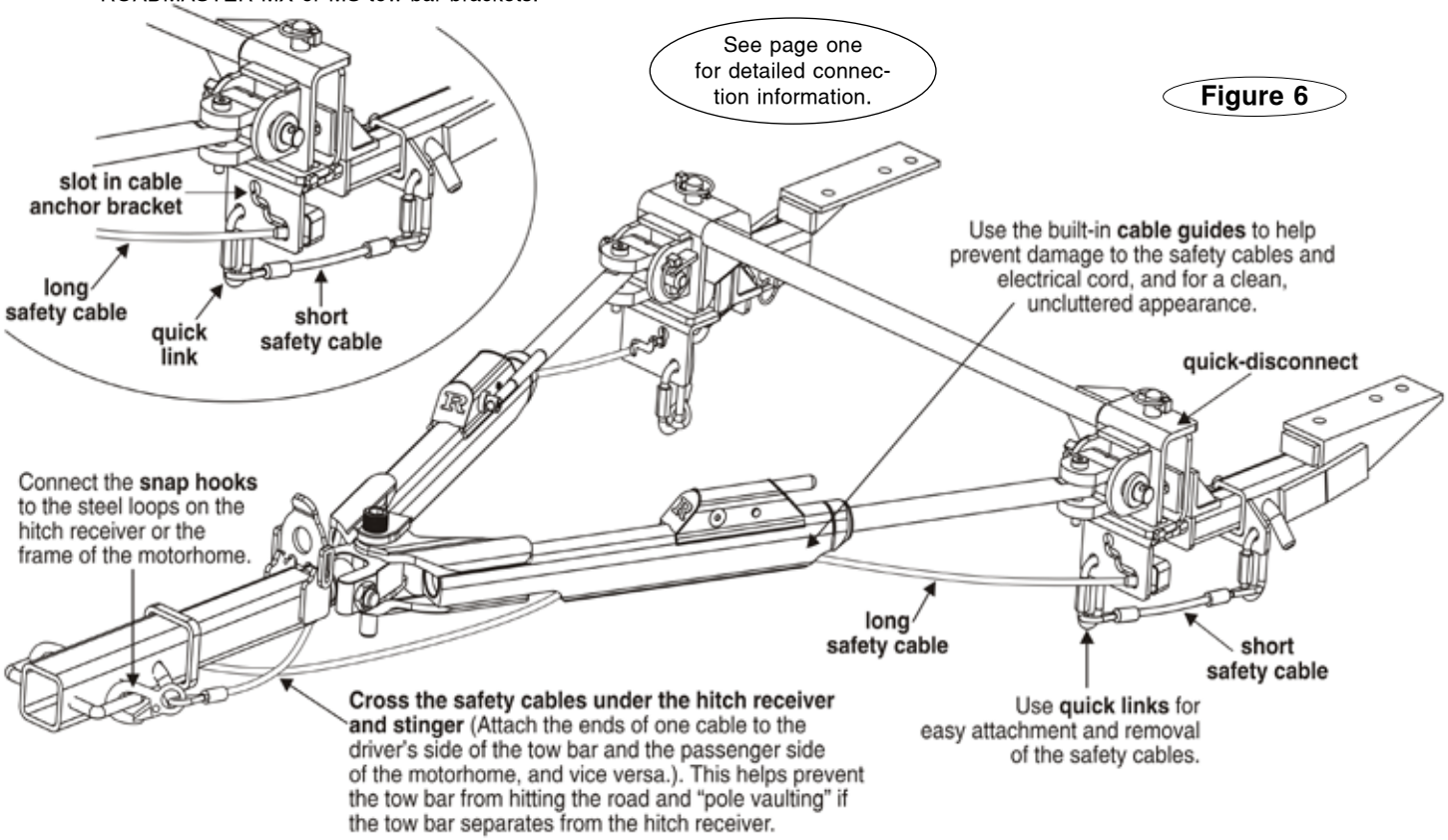

Limited Warranty

1. **WARRANTY**

1a. **WARRANTY OF CONFORMITY AT TIME OF SALE**

ROADMASTER, Inc. warrants that at the time of sale of this product it will be free from defects in material and manufacture and will conform to ROADMASTER'S specifications for the product.

1b. **CONDITIONAL ONE-YEAR WARRANTY**

In addition to the preceding time-of-sale warranty, if the product registration card is completely and accurately filled out and mailed to ROADMASTER within thirty (30) days of purchase, ROADMASTER will provide an additional warranty that for a period of one year after sale the product will remain in good working order, PROVIDED THAT the product is installed and maintained in accordance with ROADMASTER'S instructions and is not subjected to: (a) alteration or unauthorized repairs or repairs by anyone other than ROADMASTER or a ROADMASTER-authorized service center, (b) misuse, abuse, commercial use, or improper maintenance, (c) Acts of God (including without limitation hurricanes, tornadoes, floods, or other severe weather or natural phenomena), (d) failures due to products not supplied by ROADMASTER, or (e) other treatments, uses, or installations for which the product was not intended. This warranty extends only to the first retail purchaser-consumer of the product and is not transferable.

2. **DISCLAIMER OF OTHER WARRANTIES**

The preceding warranties are the exclusive and sole express warranties given by ROADMASTER. They supersede any prior, contrary or additional representations, whether oral or written. No agent, representative, dealer or employee has the authority to alter or increase the obligations or limitations of this warranty. Any implied warranties, including the WARRANTY OF MERCHANTABILITY and any WARRANTY OF FITNESS FOR A PARTICULAR PURPOSE, are limited in duration to thirty days or the term of the applicable express warranty provided above, whichever is longer.

Some states do not allow limitations on how long an implied warranty lasts, so the above limitation may not apply to you.

3. **EXCLUSIVE REMEDY FOR ANY NONCONFORMITIES**

If during the applicable Warranty Period, the product does not conform to the preceding Warranties, notify ROADMASTER as provided below, and within a reasonable time ROADMASTER will provide, at its option, one of the following: (1) replacement components for any nonconforming or defective product or components or (2) the percentage of the purchase price for the nonconforming product equal to the percentage of the Warranty Period remaining when ROADMASTER is notified of the nonconformity. ROADMASTER will, at its option, (a) use new and/or reconditioned parts in performing warranty repairs and making replacement products, (b) use parts or products of original or improved design in the repair or replacement. If ROADMASTER repairs or replaces a product, its warranty continues for the remaining portion of the original Warranty Period or 60 days from the date of the return shipment to the customer, whichever is greater. All replaced products and all parts removed from repaired products become the property of ROADMASTER. ROADMASTER will not provide, and will not be liable for, labor, costs of removal or reinstallation of components, disposal, shipping, freight, taxes, or other incidental charges.

THESE REMEDIES ARE THE EXCLUSIVE AND SOLE REMEDIES FOR ANY BREACH OF WARRANTY.

For any breach of warranty, the Owner must telephone ROADMASTER at 1-800-669-9690 within thirty (30) days after discovering the nonconformity. Do not return any product without first calling ROADMASTER and getting a return authorization number. Returned products must include the return authorization number and a copy of the original invoice, bill or other proof of the date of purchase. ROADMASTER will authorize (a) shipment of the product to ROADMASTER or (b) repair or replacement at the nearest warranty service center–in both cases with shipping at your expense. Do not purchase replacement parts or pay for repair labor–you will not be reimbursed. Compliance with the requirements of this paragraph is a condition to coverage under the Warranty: if these requirements are not complied with, ROADMASTER will have no obligation to provide any remedy for any breach of warranty.

4. **DISCLAIMER OF INCIDENTAL AND CONSEQUENTIAL DAMAGES**

IN NO EVENT SHALL ROADMASTER BE LIABLE FOR ANY INCIDENTAL, SPECIAL, INDIRECT OR CONSEQUENTIAL DAMAGES, WHETHER RESULTING FROM NONDELIVERY OR FROM THE USE, MISUSE OR INABILITY TO USE THE PRODUCT OR FROM DEFECTS IN THE PRODUCT.

Some states do not allow the exclusion or limitation of incidental or consequential damages, so the above limitation may not apply to you.

5. **APPLICABLE LAW**

This Warranty will be interpreted, construed, and enforced in all respects in accordance with the laws of the State of Washington, without reference to its choice of law rules. The U.N. Convention on Contracts for the International Sale of Goods will not apply to this Warranty.

6. **SEVERABILITY**

If any provision of this warranty is found to be invalid or unenforceable, then the remainder shall have full force and effect, and the invalid provision shall be partially enforced to the maximum extent permitted by law to effectuate the purpose of the agreement.

7. **ADDRESS FOR NOTICES TO ROADMASTER**

ROADMASTER, Inc., 6110 N.E. 127th Ave., Vancouver, WA 98682

This warranty gives you specific legal rights, and you may also have other rights which vary from State to State.

ROADMASTER

Quality Towing Systems since 1974

ROADMASTER, Inc. • 6110 NE 127th Ave. • Vancouver, WA 98682
• 800-669-9690 • Fax 360-735-9300 • www.roadmasterinc.com

85-2715-00 rev. 04 10-08